November 7, 2025

RE: Addendum II - Request for Proposal (RFP) for new electrical services for a new operations facility at 14623 172nd Ave., Grand Haven, Michigan 49417 scheduled to begin March 1, 2026.

To All Proposers:

This notice is addendum II to the RFP issued on Monday, October 27, 2025. This notice is to provide updated electrical panel schedules for load calculation. See attachment.

The Harbor Transit Board reserves the right to postpone, accept or reject any and all proposals, in whole or in part, on such basis as the Board deems to be in its interest to do so, subject to the rules and regulations set forth by the Federal Transit Administration and the Michigan Department of Transportation.

Dana Appel
Finance/Assistant Director
Harbor Transit
440 N Ferry Street
Grand Haven, MI 49417

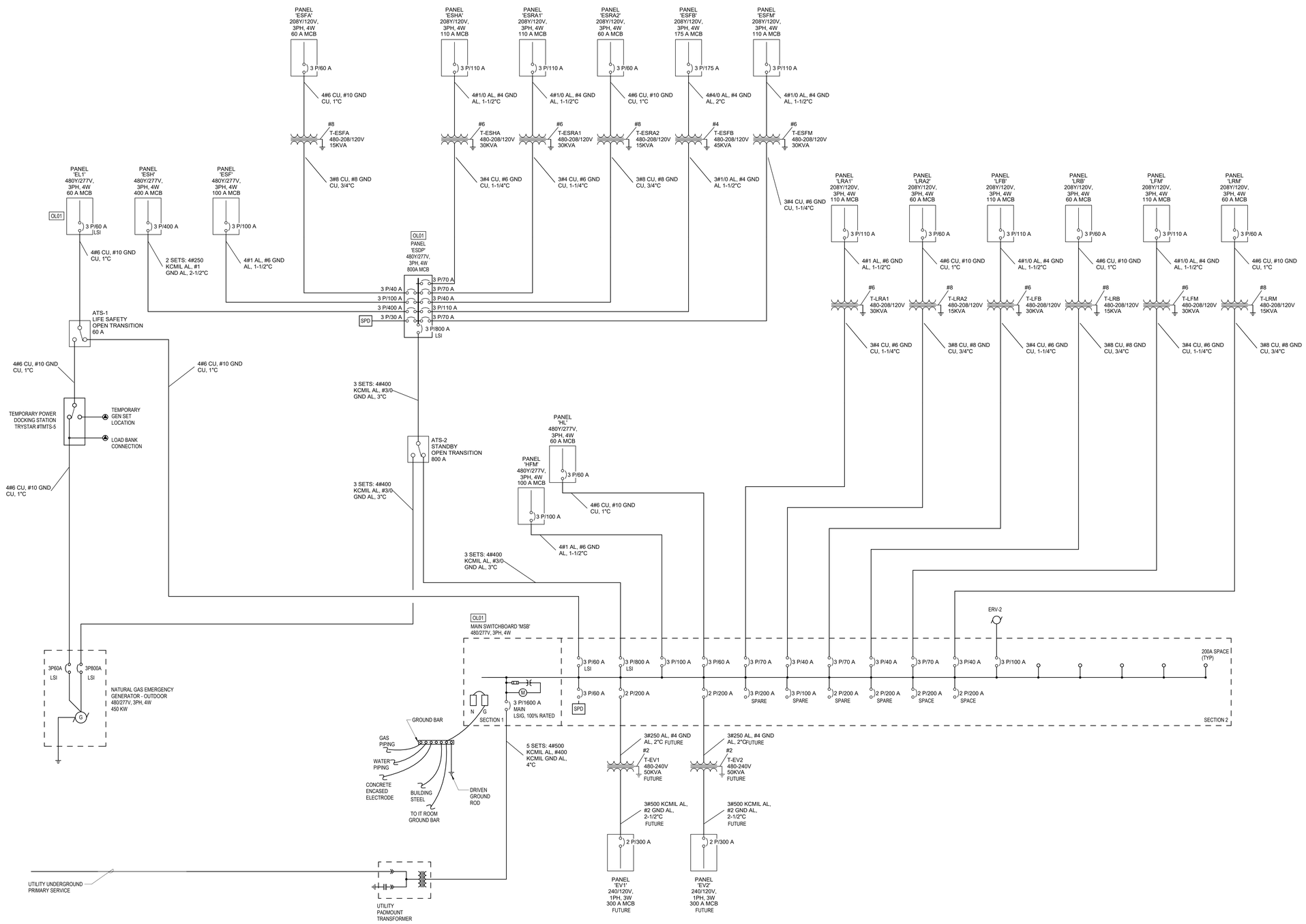

KEYNOTES

NUMBER	NOTE
OL01	ALL BREAKERS IN THIS SWITCHBOARD OR PANEL SHALL BE METERED FOR ENERGY CODE REQUIREMENTS. METER OUTPUTS SHALL BE BACNET FOR INTEGRATION INTO BMS SYSTEM.

E3 ELECTRICAL ONE-LINE DIAGRAM
NOT TO SCALE

PROGRESSIVE AE, INC.
PROGRESSIVE COMPANIES
Charlotte, NC | Detroit, MI | Grand Rapids, MI
weareprogressive.com

HARBOR TRANSIT
NEW OPERATIONS CENTER

14623 172ND AVE, GRAND HAVEN, MI 49417

ISSUANCE
10/31/2025 BID AND PERMIT

PROJECT NUMBER
70890004
PROJECT MANAGER
S. HORTON
PROFESSIONAL
D.HERSCHER
DRAWN BY
K.MENK
CHECKED BY
D.HERSCHER

ELECTRICAL ONE-LINE DIAGRAMS
E501

10/31/2025 8:18:39 AM Autodesk Docs://70890004 - Harbor Transit/70890004-HTOB-ELEC-v1
ELECTRICAL ONE-LINE DIAGRAMS
THIS DOCUMENT HAS BEEN PREPARED BY PROGRESSIVE AE, INC. AS AN INSTRUMENT OF SERVICE. AND PROGRESSIVE AE, INC. SHALL RETAIN ALL COMMON LAW, STATUTORY AND OTHER RESERVED RIGHTS, INCLUDING THE COPYRIGHT THERETO.

PANELBOARD: ESDP

LOCATION: ELECTRICAL 205
MOUNTING: SURFACE Type 1
FED FROM: ATS2
FEEDER: SEE ONE-LINE DIAGRAM

PANEL TYPE:
VOLTAGE: 480Y/277V / 3 ø / 4W
BUS AMPS: 800 AMPS
MAIN DEVICE: 800 A
A.I.C. RATING:
SPECIAL:

LOAD DESCRIPTION	LOAD TYPE	P	TRIP	CKT	A		B		C		CKT	TRIP	P	LOAD TYPE	LOAD DESCRIPTION
				1	10503	76496					2				
ESF	MTR;	3	100 A	3			10503	76496			4	400 A	3	MTR; HVAC	ESH
				5					10503	76496	6				
				7	2784	5105					8				
T-ESFA	OTHR; MTR; RCPT	3	40 A	9			1060	3398			10	70 A	3	MTR; RCPT; HVAC	T-ESHA
				11					0	6554	12				
				13	8820	2400					14				
T-ESRA1	RCPT	3	70 A	15			8500	1200			16	40 A	3	RCPT	T-ESRA2
				17					6060	1140	18				
				19	11858	6640					20				
T-ESFB	MTR; RCPT	3	110 A	21			11318	5284			22	70 A	3	MTR; RCPT	T-ESFM
				23					10568	5284	24				
SPACE	--	1	--	25	--	--					26	--	1	--	SPACE
SPACE	--	1	--	27			--	--			28	--	1	--	SPACE
SPACE	--	1	--	29					--	--	30	--	1	--	SPACE
SPACE	--	1	--	31	--	--					32	--	1	--	SPACE
SPACE	--	1	--	33			--	--			34	--	1	--	SPACE
SPACE	--	1	--	35					--	--	36	--	1	--	SPACE
				37	0	0					38				
SPARE	--	3	110 A	39			0	0			40	70 A	3	--	SPARE
				41					0	0	42				

BREAKER MODIFIER LEGEND
(G) - GROUND FAULT CIRCUIT INTERRUPTER. (A) - ARC FAULT CIRCUIT INTERRUPTER. (L) - LOCK-OUT PROVISIONS. (S) - SHUNT-TRIP.
(F) - FIRE ALARM CIRCUIT - PROVIDE LOCK-ON DEVICE AND PERMANENT RED MARKING AND LABELING AS "FIRE ALARM CIRCUIT".

LOAD CLASSIFICATION	CONNECTED LOAD	DEMAND FACTOR	ESTIMATED DEMAND	PANEL TOTALS	
Motor	155526 VA	105.02%	163341 VA		
Other	0 VA	0.00%	0 VA	CONNECTED LOAD:	358968 VA
Receptacle	36804 VA	63.59%	23402 VA	EST. DEMAND LOAD:	353381 VA
HVAC	166638 VA	100.00%	166638 VA		
				CONNECTED CURRENT:	432 A
				EST. DEMAND CURRENT:	425 A

NOTES:

PANELBOARD: EL1

LOCATION: ELECTRICAL 205
MOUNTING: SURFACE NEMA 1
FED FROM: ATS1
FEEDER: SEE ONE-LINE DIAGRAM

PANEL TYPE:
VOLTAGE: 480Y/277V / 3 ø / 4W
BUS AMPS: 100 AMPS
MAIN DEVICE: 60 A MAIN CB
A.I.C. RATING: 14,000 AMPS SYMMETRICAL
SPECIAL:

LOAD DESCRIPTION	LOAD TYPE	P	TRIP	CKT	A		B		C		CKT	TRIP	P	LOAD TYPE	LOAD DESCRIPTION
LTG PART A	LTS	1	20 A	1	4156	2764					2	20 A	1	LTS	LTG PART A
LTG PART A	LTS	1	20 A	3			2174	1292			4	20 A	1	LTS	EXTERIOR LTG
LIGHTING BUS STORAGE 300	LTS	1	20 A	5					2337	1862	6	20 A	1	LTS	LIGHTING BUS STORAGE 300
LIGHTING BUS STORAGE 300	LTS	1	20 A	7	2128	566					8	20 A	1	LTS	LTG ROOM 209/ STAIR 212
SPACE	--	1	--	9			--	--			10	--	1	--	SPACE
SPACE	--	1	--	11					--	--	12	--	1	--	SPACE
SPACE	--	1	--	13	--	--					14	--	1	--	SPACE
SPACE	--	1	--	15			--	--			16	--	1	--	SPACE
SPACE	--	1	--	17					--	--	18	--	1	--	SPACE
SPACE	--	1	--	19	--	--					20	--	1	--	SPACE
SPARE	--	1	20 A	21			0	0			22	20 A	1	--	SPARE
SPARE	--	1	20 A	23					0	0	24	20 A	1	--	SPARE
SPARE	--	1	20 A	25	0	0					26	20 A	1	--	SPARE
SPARE	--	1	20 A	27			0	0			28	20 A	1	--	SPARE
SPARE	--	1	20 A	29					0	0	30	20 A	1	--	SPARE

BREAKER MODIFIER LEGEND
(G) - GROUND FAULT CIRCUIT INTERRUPTER. (A) - ARC FAULT CIRCUIT INTERRUPTER. (L) - LOCK-OUT PROVISIONS. (S) - SHUNT-TRIP.
(F) - FIRE ALARM CIRCUIT - PROVIDE LOCK-ON DEVICE AND PERMANENT RED MARKING AND LABELING AS "FIRE ALARM CIRCUIT".

LOAD CLASSIFICATION	CONNECTED LOAD	DEMAND FACTOR	ESTIMATED DEMAND	PANEL TOTALS	
Lighting	17279 VA	125.00%	21599 VA		
				CONNECTED LOAD:	17279 VA
				EST. DEMAND LOAD:	21599 VA
				CONNECTED CURRENT:	21 A
				EST. DEMAND CURRENT:	26 A

NOTES:

Switchboard: MSB

Location: ELECTRICAL 205
Supply From: UTILITY TRANSFORMER
Mounting: FLOOR
Enclosure: NEMA 1

Volts: 480Y/277
Phases: 3
Wires: 4

A.I.C. Rating:
Mains Type:
Mains Rating: 1600 A
MCB Rating: 1600 A

Notes:

CKT	Circuit Description	# of Poles	Frame Size	Trip Rating	Load	Remarks
1	ATS1	3	400 A	60 A	17279 VA	
2	ATS2	3	800 A	800 A	358968 VA	
3	HFM	3	400 A	100 A	28266 VA	
4	HL	3	400 A	60 A	1836 VA	
5	T-LRA1	3	400 A	70 A	20635 VA	
6	T-LRA2	3	400 A	40 A	7834 VA	
7	T-LFB	3	400 A	70 A	12320 VA	
8	T-LRB	3	400 A	40 A	6120 VA	
9	T-LFM	3	400 A	70 A	24104 VA	
10	T-LRM	3	400 A	40 A	7348 VA	
11	ERV-2 - ROOF	3	400 A	100 A	62527 VA	
12						
13						
14						
15						
16						
17						
18						
				Total Conn. Load:	546656 VA	
				Total Amps:	658 A	

Legend:

Load Classification	CONNECTED LOAD	DEMAND FACTOR	ESTIMATED DEMAND	Panel Totals	
Lighting	19115 VA	125.00%	23894 VA		
Motor	197305 VA	103.96%	205120 VA	Total Conn. Load:	546656 VA
Other	141 VA	100.00%	141 VA	Total Est. Demand:	513781 VA
Receptacle	100965 VA	54.95%	55483 VA	Total Conn.:	658 A
HVAC	229164 VA	100.00%	229164 VA	Total Est. Demand:	618 A

Notes:

PANELBOARD: ESFB

LOCATION: MECHANICAL 206
MOUNTING: SURFACE NEMA 1
FED FROM: T-ESFB
FEEDER: SEE ONE-LINE DIAGRAM

PANEL TYPE:
VOLTAGE: 208Y/120V / 3 ø / 4W
BUS AMPS: 225 AMPS
MAIN DEVICE: 175 A MAIN CB
A.I.C. RATING: 10,000 AMPS SYMMETRICAL
SPECIAL:

LOAD DESCRIPTION	LOAD TYPE	P	TRIP	CKT	A		B		C		CKT	TRIP	P	LOAD TYPE	LOAD DESCRIPTION
				1	1321	1321					2				
OVERHEAD DOOR - 300	MTR	3	20 A	3			1321	1321			4	20 A	3	MTR	OVERHEAD DOOR - 300
				5					1321	1321	6				
				7	1321	1321					8				
OVERHEAD DOOR - 300	MTR	3	20 A	9			1321	1321			10	20 A	3	MTR	OVERHEAD DOOR - 300
				11					1321	1321	12				
				13	1321	1321					14				
OVERHEAD DOOR - 300	MTR	3	20 A	15			1321	1321			16	20 A	3	MTR	OVERHEAD DOOR - 300
				17					1321	1321	18				
				19	1321	1321					20				
OVERHEAD DOOR - 300	MTR	3	20 A	21			1321	1321			22	20 A	3	MTR	OVERHEAD DOOR - 300
				23					1321	1321	24				
GEN BATT CHARGER - ROOF	RCPT	1	20 A	25	540	750					26	20 A	2	RCPT	GEN BLOCK HTR - ROOF
SPACE	--	1	--	27			--	750			28				
SPACE	--	1	--	29					--	--	30	--	1	--	SPACE
				31	0	0					32				
SPARE	--	3	20 A	33			0	0			34	20 A	3	--	SPARE
				35					0	0	36				
				37	0	0					38				
SPARE	--	3	20 A	39			0	0			40	20 A	3	--	SPARE
				41					0	0	42				

BREAKER MODIFIER LEGEND
(G) - GROUND FAULT CIRCUIT INTERRUPTER. (A) - ARC FAULT CIRCUIT INTERRUPTER. (L) - LOCK-OUT PROVISIONS. (S) - SHUNT-TRIP.
(F) - FIRE ALARM CIRCUIT - PROVIDE LOCK-ON DEVICE AND PERMANENT RED MARKING AND LABELING AS "FIRE ALARM CIRCUIT".

LOAD CLASSIFICATION	CONNECTED LOAD	DEMAND FACTOR	ESTIMATED DEMAND	PANEL TOTALS	
Motor	31703 VA	103.13%	32693 VA		
Receptacle	2040 VA	100.00%	2040 VA	CONNECTED LOAD:	33743 VA
				EST. DEMAND LOAD:	34733 VA
				CONNECTED CURRENT:	94 A
				EST. DEMAND CURRENT:	96 A

NOTES:

PANELBOARD: ESFA

LOCATION: ELECTRICAL 205
MOUNTING: SURFACE NEMA 1
FED FROM: T-ESFA
FEEDER: SEE ONE-LINE DIAGRAM

PANEL TYPE:
VOLTAGE: 208Y/120V / 3 ø / 4W
BUS AMPS: 100 AMPS
MAIN DEVICE: 60 A MAIN CB
A.I.C. RATING: 10,000 AMPS SYMMETRICAL
SPECIAL:

LOAD DESCRIPTION	LOAD TYPE	P	TRIP	CKT	A		B		C		CKT	TRIP	P	LOAD TYPE	LOAD DESCRIPTION
ADA DOORS - 100	OTHR; MTR	1	20 A	1	1392	1392					2	20 A	1	MTR	ADA DOORS - 120
RCP-1 - 112	MTR	1	20 A	3			60	1000			4	20 A	1	RCPT	DWH-1 - 112
SPACE	--	1	--	5					--	--	6	--	1	--	SPACE
SPACE	--	1	--	7	--	--					8	--	1	--	SPACE
SPACE	--	1	--	9			--	--			10	--	1	--	SPACE
SPACE	--	1	--	11					--	--	12	--	1	--	SPACE
SPACE	--	1	--	13	--	--					14	--	1	--	SPACE
SPACE	--	1	--	15			--	--			16	--	1	--	SPACE
SPACE	--	1	--	17					--	--	18	--	1	--	SPACE
SPACE	--	1	--	19	--	--					20	--	1	--	SPACE
SPARE	--	1	20 A	21			0	0			22	20 A	1	--	SPARE
SPARE	--	1	20 A	23					0	0	24	20 A	1	--	SPARE
SPARE	--	1	20 A	25	0	0					26	20 A	1	--	SPARE
SPARE	--	1	20 A	27			0	0			28	20 A	1	--	SPARE
SPARE	--	1	20 A	29					0	0	30	20 A	1	--	SPARE

BREAKER MODIFIER LEGEND
(G) - GROUND FAULT CIRCUIT INTERRUPTER. (A) - ARC FAULT CIRCUIT INTERRUPTER. (L) - LOCK-OUT PROVISIONS. (S) - SHUNT-TRIP.
(F) - FIRE ALARM CIRCUIT - PROVIDE LOCK-ON DEVICE AND PERMANENT RED MARKING AND LABELING AS "FIRE ALARM CIRCUIT".

LOAD CLASSIFICATION	CONNECTED LOAD	DEMAND FACTOR	ESTIMATED DEMAND	PANEL TOTALS	
Motor	2844 VA	106.12%	3018 VA		
Other	0 VA	0.00%	0 VA	CONNECTED LOAD:	3844 VA
Receptacle	1000 VA	100.00%	1000 VA	EST. DEMAND LOAD:	4018 VA
				CONNECTED CURRENT:	11 A
				EST. DEMAND CURRENT:	11 A

NOTES:

PANELBOARD: ESF

LOCATION: ELECTRICAL 205
MOUNTING: SURFACE NEMA 1
FED FROM: ESDP
FEEDER: SEE ONE-LINE DIAGRAM

PANEL TYPE:
VOLTAGE: 480Y/277V / 3 ø / 4W
BUS AMPS: 100 AMPS
MAIN DEVICE: 100 A MAIN CB
A.I.C. RATING: 14,000 AMPS SYMMETRICAL
SPECIAL:

LOAD DESCRIPTION	LOAD TYPE	P	TRIP	CKT	A		B		C		CKT	TRIP	P	LOAD TYPE	LOAD DESCRIPTION
				1	9422	1081					2				
C-1A - 209	MTR	3	70 A	3			9422	1081			4	20 A	3	MTR	EF-200 - ROOF
				5					9422	1081	6				
SPACE	--	1	--	7	--	--					8	--	1	--	SPACE
SPACE	--	1	--	9			--	--			10	--	1	--	SPACE
SPACE	--	1	--	11					--	--	12	--	1	--	SPACE
SPACE	--	1	--	13	--	--					14	--	1	--	SPACE
SPACE	--	1	--	15			--	--			16	--	1	--	SPACE
SPACE	--	1	--	17					--	--	18	--	1	--	SPACE
SPACE	--	1	--	19	--	--					20	--	1	--	SPACE
SPARE	--	1	20 A	21			0	0			22	20 A	1	--	SPARE
SPARE	--	1	20 A	23					0	0	24	20 A	1	--	SPARE
SPARE	--	1	20 A	25	0	0					26	20 A	1	--	SPARE
SPARE	--	1	20 A	27			0	0			28	20 A	1	--	SPARE
SPARE	--	1	20 A	29					0	0	30	20 A	1	--	SPARE

BREAKER MODIFIER LEGEND
(G) - GROUND FAULT CIRCUIT INTERRUPTER. (A) - ARC FAULT CIRCUIT INTERRUPTER. (L) - LOCK-OUT PROVISIONS. (S) - SHUNT-TRIP.
(F) - FIRE ALARM CIRCUIT - PROVIDE LOCK-ON DEVICE AND PERMANENT RED MARKING AND LABELING AS "FIRE ALARM CIRCUIT".

LOAD CLASSIFICATION	CONNECTED LOAD	DEMAND FACTOR	ESTIMATED DEMAND	PANEL TOTALS	
Motor	31509 VA	122.43%	38575 VA		
				CONNECTED LOAD:	31509 VA
				EST. DEMAND LOAD:	38575 VA
				CONNECTED CURRENT:	38 A
				EST. DEMAND CURRENT:	46 A

NOTES:

PANELBOARD: ESHA

LOCATION: MECHANICAL 206
MOUNTING: SURFACE NEMA 1
FED FROM: T-ESHA
FEEDER: SEE ONE-LINE DIAGRAM

PANEL TYPE:
VOLTAGE: 208Y/120V / 3 ø / 4W
BUS AMPS: 225 AMPS
MAIN DEVICE: 110 A MAIN CB
A.I.C. RATING: 10,000 AMPS SYMMETRICAL
SPECIAL:

LOAD DESCRIPTION	LOAD TYPE	P	TRIP	CKT	A		B		C		CKT	TRIP	P	LOAD TYPE	LOAD DESCRIPTION
B-1 - 206	RCPT; HVAC	1	20 A	1	720	720					2	20 A	1	RCPT	B-2 - 206
B-3 - 206	RCPT; HVAC	1	20 A	3			720	2018			4	25 A	2	MTR	AC-113 / ACCU-113
AC-205 / ACCU-205	MTR	2	20 A	5					1633	2018	6				
				7	1633	456					8	15 A	1	MTR	EF-116 - ROOF
CUH-1 - 100	MTR	1	20 A	9			330	330			10	20 A	1	MTR	CUH-2 - 120
UH-204 - 204	MTR	1	15 A	11					1176	1728	12	20 A	1	RCPT	RH-1,RH-2,RH-3 - 200
UH-209 - 209	MTR	1	15 A	13	1176	400					14	20 A	1	RCPT	DF-200A,DF-200B - 200
SPACE	--	1	--	15			--	--			16	--	1	--	SPACE
SPACE	--	1	--	17					--	--	18	--	1	--	SPACE
SPACE	--	1	--	19	--	--					20	--	1	--	SPACE
SPACE	--	1	--	21			--	--			22	--	1	--	SPACE
SPACE	--	1	--	23					--	--	24	--	1	--	SPACE
SPACE	--	1	--	25	--	--					26	--	1	--	SPACE
SPACE	--	1	--	27			--	--			28	--	1	--	SPACE
SPACE	--	1	--	29					--	--	30	--	1	--	SPACE
SPARE	--	1	20 A	31	0	0					32	20 A	1	--	SPARE
SPARE	--	1	20 A	33			0	0			34	20 A	1	--	SPARE
SPARE	--	1	20 A	35					0	0	36	20 A	1	--	SPARE
SPARE	--	1	20 A	37	0	0					38	20 A	1	--	SPARE
SPARE	--	1	20 A	39			0	0			40	20 A	1	--	SPARE
SPARE	--	1	20 A	41					0	0	42	20 A	1	--	SPARE

BREAKER MODIFIER LEGEND
(G) - GROUND FAULT CIRCUIT INTERRUPTER. (A) - ARC FAULT CIRCUIT INTERRUPTER. (L) - LOCK-OUT PROVISIONS. (S) - SHUNT-TRIP.
(F) - FIRE ALARM CIRCUIT - PROVIDE LOCK-ON DEVICE AND PERMANENT RED MARKING AND LABELING AS "FIRE ALARM CIRCUIT".

LOAD CLASSIFICATION	CONNECTED LOAD	DEMAND FACTOR	ESTIMATED DEMAND	PANEL TOTALS	
Motor	10769 VA	109.17%	11757 VA		
Receptacle	4288 VA	100.00%	4288 VA	CONNECTED LOAD:	15057 VA
HVAC	0 VA	0.00%	0 VA	EST. DEMAND LOAD:	16045 VA
				CONNECTED CURRENT:	42 A
				EST. DEMAND CURRENT:	45 A

NOTES:

PANELBOARD: ESH

LOCATION: COMPRESSOR ROOM 209
MOUNTING: SURFACE NEMA 1
FED FROM: ESDP
FEEDER: SEE ONE-LINE DIAGRAM

PANEL TYPE:
VOLTAGE: 480Y/277V / 3 ø / 4W
BUS AMPS: 400 AMPS
MAIN DEVICE: 400 A MAIN CB
A.I.C. RATING: 14,000 AMPS SYMMETRICAL
SPECIAL:

LOAD DESCRIPTION	LOAD TYPE	P	TRIP	CKT	A		B		C		CKT	TRIP	P	LOAD TYPE	LOAD DESCRIPTION
				1	3048	3048					2				
P-1 - 206	MTR	3	20 A	3			3048	3048			4	20 A	3	MTR	P-2 - 206
				5					3048	3048	6				
				7	1330	1330					8				
BP-1 - 206	MTR	3	20 A	9			1330	1330			10	20 A	3	MTR	BP-2 - 206
				11					1330	1330	12				
				13	1330	10420					14				
BP-3 - 206	MTR	3	20 A	15			1330	10420			16	50 A	3	MTR	AHU-1 - 206
				17					1330	10420	18				
				19	20842	10317					20				
ERV-1 - ROOF	MTR; HVAC	3	100 A	21			20842	10317			22	50 A	3	MTR; HVAC	ERV-3 - ROOF
				23					20842	10317	24				
				25	24387	443					26				
ACCU-1 - ROOF	MTR; HVAC	3	110 A	27			24387	443			28	15 A	3	MTR	EF-209 - ROOF
				29					24387	443	30				
				31	0	0					32				
SPARE	--	3	20 A	33			0	0			34	20 A	3	--	SPARE
				35					0	0	36				
				37	0	0					38				
SPARE	--	3	20 A	39			0	0			40	20 A	3	--	SPARE
				41					0	0	42				

BREAKER MODIFIER LEGEND
(G) - GROUND FAULT CIRCUIT INTERRUPTER. (A) - ARC FAULT CIRCUIT INTERRUPTER. (L) - LOCK-OUT PROVISIONS. (S) - SHUNT-TRIP.
(F) - FIRE ALARM CIRCUIT - PROVIDE LOCK-ON DEVICE AND PERMANENT RED MARKING AND LABELING AS "FIRE ALARM CIRCUIT".

LOAD CLASSIFICATION	CONNECTED LOAD	DEMAND FACTOR	ESTIMATED DEMAND	PANEL TOTALS	
Motor	62851 VA	112.43%	70666 VA		
HVAC	166638 VA	100.00%	166638 VA	CONNECTED LOAD:	229489 VA
				EST. DEMAND LOAD:	237303 VA
				CONNECTED CURRENT:	276 A
				EST. DEMAND CURRENT:	285 A

NOTES:

PANELBOARD: ESFM

LOCATION: ELECTRICAL 205
MOUNTING: SURFACE NEMA 1
FED FROM: T-ESFM
FEEDER: SEE ONE-LINE DIAGRAM

PANEL TYPE:
VOLTAGE: 208Y/120V / 3 ø / 4W
BUS AMPS: 225 AMPS
MAIN DEVICE: 110 A MAIN CB
A.I.C. RATING: 10,000 AMPS SYMMETRICAL
SPECIAL:

LOAD DESCRIPTION	LOAD TYPE	P	TRIP	CKT	A		B		C		CKT	TRIP	P	LOAD TYPE	LOAD DESCRIPTION
				1	1321	1321					2				
OVERHEAD DOOR - 200	MTR	3	20 A	3			1321	1321			4	20 A	3	MTR	OVERHEAD DOOR - 200
				5					1321	1321	6				
				7	1321	1321					8				
OVERHEAD DOOR - 200	MTR	3	20 A	9			1321	1321			10	20 A	3	MTR	OVERHEAD DOOR - 200
				11					1321	1321	12				
HAND WASH SINK - 200 (G)	RCPT	1	20 A	13	180	1176					14	20 A	1	RCPT	RCPT - 209
				15				--			16	--	1	--	SPACE
				17						--	18	--	1	--	SPACE
				19		--					20	--	1	--	SPACE
SPACE	--	1	--	21			--	--			22	--	1	--	SPACE
SPACE	--	1	--	23					--	--	24	--	1	--	SPACE
SPACE	--	1	--	25	--	--					26	--	1	--	SPACE
SPACE	--	1	--	27			--	--			28	--	1	--	SPACE
SPACE	--	1	--	29					--	--	30	--	1	--	SPACE
SPARE	--	1	20 A	31	0	0					32	20 A	1	--	SPARE
SPARE	--	1	20 A	33			0	0			34	20 A	1	--	SPARE
SPARE	--	1	20 A	35					0	0	36	20 A	1	--	SPARE
SPARE	--	1	20 A	37	0	0					38	20 A	1	--	SPARE
SPARE	--	1	20 A	39			0	0			40	20 A	1	--	SPARE
SPARE	--	1	20 A	41					0	0	42	20 A	1	--	SPARE

BREAKER MODIFIER LEGEND
(G) - GROUND FAULT CIRCUIT INTERRUPTER. (A) - ARC FAULT CIRCUIT INTERRUPTER. (L) - LOCK-OUT PROVISIONS. (S) - SHUNT-TRIP.
(F) - FIRE ALARM CIRCUIT - PROVIDE LOCK-ON DEVICE AND PERMANENT RED MARKING AND LABELING AS "FIRE ALARM CIRCUIT".

LOAD CLASSIFICATION	CONNECTED LOAD	DEMAND FACTOR	ESTIMATED DEMAND	PANEL TOTALS	
Motor	15851 VA	106.25%	16842 VA		
Receptacle	1356 VA	100.00%	1356 VA	CONNECTED LOAD:	17207 VA
				EST. DEMAND LOAD:	18198 VA
				CONNECTED CURRENT:	48 A
				EST. DEMAND CURRENT:	51 A

NOTES:

PROGRESSIVE AE, INC.
PROGRESSIVE COMPANIES
Charlotte, NC | Detroit, MI | Grand Rapids, MI
weareprogressive.com

HARBOR TRANSIT
NEW OPERATIONS CENTER
14623 172ND AVE, GRAND HAVEN, MI 49417

ISSUANCE
10/31/2025 BID AND PERMIT

PROJECT NUMBER
70890004
PROJECT MANAGER
S. HORTON
PROFESSIONAL
D.HERSCHER
DRAWN BY
K.MENK
CHECKED BY
D.HERSCHER

ELECTRICAL PANEL SCHEDULES
E603

10/31/2025 6:18:52 AM Autodesk Docs://70890004 - Harbor Transit/70890004-HT-08-ELEC.rvt
BY: EBSO
FILE: E603 - PANEL SCHEDULES
THIS DOCUMENT HAS BEEN PREPARED BY PROGRESSIVE AE, INC. AS AN INSTRUMENT OF SERVICE, AND PROGRESSIVE AE, INC. SHALL RETAIN ALL COMMON LAW, STATUTORY AND OTHER RESERVED RIGHTS, INCLUDING THE COPYRIGHT THERETO

PANELBOARD: HFM

LOCATION: COMPRESSOR ROOM 209
MOUNTING: SURFACE NEMA 1
FED FROM: MSB
FEEDER: SEE ONE-LINE DIAGRAM

PANEL TYPE:
VOLTAGE: 480Y/277V / 3 ø / 4W
BUS AMPS: 100 AMPS
MAIN DEVICE: 100 A MAIN CB
A.I.C. RATING: 14,000 AMPS SYMMETRICAL
SPECIAL:

LOAD DESCRIPTION	LOAD TYPE	P	TRIP	CKT	A		B		C		CKT	TRIP	P	LOAD TYPE	LOAD DESCRIPTION
				1	9422	--					2	--	1	--	SPACE
C-1B - 209	MTR	3	70 A	3			9422	--			4	--	1	--	SPACE
				5					9422	--	6	--	1	--	SPACE
SPACE	--	1	--	7	--	--					8	--	1	--	SPACE
SPACE	--	1	--	9			--	--			10	--	1	--	SPACE
SPARE	--	1	20 A	11					0	0	12	20 A	1	--	SPARE
SPARE	--	1	20 A	13	0	0					14	20 A	1	--	SPARE
SPARE	--	1	20 A	15			0	0			16	20 A	1	--	SPARE
SPARE	--	1	20 A	17					0	0	18	20 A	1	--	SPARE

BREAKER MODIFIER LEGEND
(G) - GROUND FAULT CIRCUIT INTERRUPTER. (A) - ARC FAULT CIRCUIT INTERRUPTER. (L) - LOCK-OUT PROVISIONS. (S) - SHUNT-TRIP.
(F) - FIRE ALARM CIRCUIT - PROVIDE LOCK-ON DEVICE AND PERMANENT RED MARKING AND LABELING AS "FIRE ALARM CIRCUIT".

LOAD CLASSIFICATION	CONNECTED LOAD	DEMAND FACTOR	ESTIMATED DEMAND	PANEL TOTALS	
Motor	28266 VA	125.00%	35333 VA		
				CONNECTED LOAD:	28266 VA
				EST. DEMAND LOAD:	35333 VA
				CONNECTED CURRENT:	34 A
				EST. DEMAND CURRENT:	42 A

NOTES:

PANELBOARD: ESRA2

LOCATION: ELECTRICAL 205
MOUNTING: SURFACE NEMA 1
FED FROM: T-ESRA2
FEEDER: SEE ONE-LINE DIAGRAM

PANEL TYPE:
VOLTAGE: 208Y/120V / 3 ø / 4W
BUS AMPS: 100 AMPS
MAIN DEVICE: 60 A MAIN CB
A.I.C. RATING: 10,000 AMPS SYMMETRICAL
SPECIAL:

LOAD DESCRIPTION	LOAD TYPE	P	TRIP	CKT	A		B		C		CKT	TRIP	P	LOAD TYPE	LOAD DESCRIPTION
VENDING - 107	RCPT	1	20 A	1	1000	1000					2	20 A	1	RCPT	VENDING - 107
REFRIGERATOR - 107	RCPT	1	20 A	3			600	600			4	20 A	1	RCPT	REFRIGERATOR - 107
REFRIGERATOR - 107	RCPT	1	20 A	5					600	540	6	20 A	1	RCPT	RCPT - 104
CORD REEL - 200	RCPT	1	20 A	7	200	200					8	20 A	1	RCPT	CORD REEL - 200
SPACE	--	1	--	9			--	--			10	--	1	--	SPACE
SPACE	--	1	--	11					--	--	12	--	1	--	SPACE
SPACE	--	1	--	13	--	--					14	--	1	--	SPACE
SPACE	--	1	--	15			--	--			16	--	1	--	SPACE
SPACE	--	1	--	17					--	--	18	--	1	--	SPACE
SPACE	--	1	--	19	--	--					20	--	1	--	SPACE
SPACE	--	1	--	21			0	0			22	20 A	1	--	SPARE
SPACE	--	1	--	23					0	0	24	20 A	1	--	SPARE
SPACE	--	1	--	25	0	0					26	20 A	1	--	SPARE
SPACE	--	1	--	27			0	0			28	20 A	1	--	SPARE
SPACE	--	1	--	29					0	0	30	20 A	1	--	SPARE

BREAKER MODIFIER LEGEND
(G) - GROUND FAULT CIRCUIT INTERRUPTER. (A) - ARC FAULT CIRCUIT INTERRUPTER. (L) - LOCK-OUT PROVISIONS. (S) - SHUNT-TRIP.
(F) - FIRE ALARM CIRCUIT - PROVIDE LOCK-ON DEVICE AND PERMANENT RED MARKING AND LABELING AS "FIRE ALARM CIRCUIT".

LOAD CLASSIFICATION	CONNECTED LOAD	DEMAND FACTOR	ESTIMATED DEMAND	PANEL TOTALS	
Receptacle	4740 VA	100.00%	4740 VA		
				CONNECTED LOAD:	4740 VA
				EST. DEMAND LOAD:	4740 VA
				CONNECTED CURRENT:	13 A
				EST. DEMAND CURRENT:	13 A

NOTES:

PANELBOARD: ESRA1

LOCATION: ELECTRICAL 205
MOUNTING: SURFACE NEMA 1
FED FROM: T-ESRA1
FEEDER: SEE ONE-LINE DIAGRAM

PANEL TYPE:
VOLTAGE: 208Y/120V / 3 ø / 4W
BUS AMPS: 225 AMPS
MAIN DEVICE: 110 A MAIN CB
A.I.C. RATING: 10,000 AMPS SYMMETRICAL
SPECIAL:

LOAD DESCRIPTION	LOAD TYPE	P	TRIP	CKT	A		B		C		CKT	TRIP	P	LOAD TYPE	LOAD DESCRIPTION
RCPT - 122, 123	RCPT	1	20 A	1	1080	1080					2	20 A	1	RCPT	RCPT - 124, 125
RCPT - 126, 127	RCPT	1	20 A	3			1260	720			4				
				5					540	720	6	20 A	3	RCPT	WORKSTATIONS - 129
WORKSTATIONS - 129	RCPT	3	20 A	7	540	720					8				
				9			540	720			10	20 A	1	RCPT	WORKSTATIONS - 129
WORKSTATIONS - 129	RCPT	1	20 A	11					540	720	12	20 A	1	RCPT	RCPT - 135, 136
RCPT - 121	RCPT	1	20 A	13	1200	1080					14	20 A	1	RCPT	RCPT - 132
Receptacle DISPATCH 132	RCPT	1	20 A	15			1080	1080			16	20 A	1	RCPT	RCPT - 132
Receptacle WORK / COPY 133	RCPT	1	20 A	17					1200	1080	18	20 A	1	RCPT	RCPT - 130
RCPT - 113	RCPT	1	20 A	19	1200	1200					20	20 A	1	RCPT	RCPT - 113
RCPT - 113	RCPT	1	20 A	21			1200	720			22	20 A	1	RCPT	RECEPTACLE TRAINING 102
RECEPTACLE LOCKERS 118	RCPT	1	20 A	23					540	540	24	20 A	1	RCPT	RECEPTACLE
RECEPTACLE OFFICE 207	RCPT	1	20 A	25	540	180					26	20 A	1	RCPT	MICROWAVE - 107
MICROWAVE - 107	RCPT	1	20 A	27			180	1000			28	20 A	1	RCPT	COFFEE - 107
TIME CLOCK - 110	RCPT	1	20 A	29					180	--	30	--	1	--	SPACE
SPARE	--	1	20 A	31	0	0					32	20 A	1	--	SPARE
SPARE	--	1	20 A	33			0	0			34	20 A	1	--	SPARE
SPARE	--	1	20 A	35					0	0	36	20 A	1	--	SPARE
SPARE	--	1	20 A	37	0	0					38	20 A	1	--	SPARE
SPARE	--	1	20 A	39			0	0			40	20 A	1	--	SPARE
SPARE	--	1	20 A	41					0	0	42	20 A	1	--	SPARE

BREAKER MODIFIER LEGEND
(G) - GROUND FAULT CIRCUIT INTERRUPTER. (A) - ARC FAULT CIRCUIT INTERRUPTER. (L) - LOCK-OUT PROVISIONS. (S) - SHUNT-TRIP.
(F) - FIRE ALARM CIRCUIT - PROVIDE LOCK-ON DEVICE AND PERMANENT RED MARKING AND LABELING AS "FIRE ALARM CIRCUIT".

LOAD CLASSIFICATION	CONNECTED LOAD	DEMAND FACTOR	ESTIMATED DEMAND	PANEL TOTALS	
Receptacle	23380 VA	71.39%	16690 VA		
				CONNECTED LOAD:	23380 VA
				EST. DEMAND LOAD:	16690 VA
				CONNECTED CURRENT:	65 A
				EST. DEMAND CURRENT:	46 A

NOTES:

PANELBOARD: LFM

LOCATION: ELECTRICAL 205
MOUNTING: SURFACE NEMA 1
FED FROM: T-LFM
FEEDER: SEE ONE-LINE DIAGRAM

PANEL TYPE:
VOLTAGE: 208Y/120V / 3 ø / 4W
BUS AMPS: 225 AMPS
MAIN DEVICE: 110 A MAIN CB
A.I.C. RATING: 10,000 AMPS SYMMETRICAL
SPECIAL:

LOAD DESCRIPTION	LOAD TYPE	P	TRIP	CKT	A		B		C		CKT	TRIP	P	LOAD TYPE	LOAD DESCRIPTION
WHEEL BALANCER (EQ2) - 200	RCPT	1	20 A	1	720	1800					2	20 A	1	RCPT	RECEPTACLE MAINTENANCE 200
BENCH GRINDER (EQ11) - 203	RCPT	1	20 A	3			1200	1200			4	20 A	1	RCPT	DRILL PRESS (EQ10) - 203
PARTS WASH (EQ13) - 203	RCPT	1	20 A	5					1200	696	6	20 A	1	MTR	OVERHEAD DOOR - 203
				7	4160	4160					8				
WELDER - 200	RCPT	2	50 A	9			4160	4160			10	50 A	2	RCPT	WELDER - 200
EXHAUST REELS - 200	MTR	1	20 A	11					648	--	12	--	1	--	SPACE
SPACE	--	1	--	13	--	--					14	--	1	--	SPACE
SPACE	--	1	--	15			--	--			16	--	1	--	SPACE
SPACE	--	1	--	17					--	--	18	--	1	--	SPACE
SPACE	--	1	--	19	--	--					20	--	1	--	SPACE
SPARE	--	1	20 A	21			0	0			22	20 A	1	--	SPARE
SPARE	--	1	20 A	23					0	0	24	20 A	1	--	SPARE
SPARE	--	1	20 A	25	0	0					26	20 A	1	--	SPARE
SPARE	--	1	20 A	27			0	0			28	20 A	1	--	SPARE
SPARE	--	1	20 A	29					0	0	30	20 A	1	--	SPARE

BREAKER MODIFIER LEGEND
(G) - GROUND FAULT CIRCUIT INTERRUPTER. (A) - ARC FAULT CIRCUIT INTERRUPTER. (L) - LOCK-OUT PROVISIONS. (S) - SHUNT-TRIP.
(F) - FIRE ALARM CIRCUIT - PROVIDE LOCK-ON DEVICE AND PERMANENT RED MARKING AND LABELING AS "FIRE ALARM CIRCUIT".

LOAD CLASSIFICATION	CONNECTED LOAD	DEMAND FACTOR	ESTIMATED DEMAND	PANEL TOTALS	
Motor	1344 VA	112.95%	1518 VA		
Receptacle	22760 VA	71.97%	16380 VA		
				CONNECTED LOAD:	24104 VA
				EST. DEMAND LOAD:	17898 VA
				CONNECTED CURRENT:	67 A
				EST. DEMAND CURRENT:	50 A

NOTES:

PANELBOARD: LFB

LOCATION: MECHANICAL 206
MOUNTING: SURFACE NEMA 1
FED FROM: T-LFB
FEEDER: SEE ONE-LINE DIAGRAM

PANEL TYPE:
VOLTAGE: 208Y/120V / 3 ø / 4W
BUS AMPS: 225 AMPS
MAIN DEVICE: 110 A MAIN CB
A.I.C. RATING: 10,000 AMPS SYMMETRICAL
SPECIAL:

LOAD DESCRIPTION	LOAD TYPE	P	TRIP	CKT	A		B		C		CKT	TRIP	P	LOAD TYPE	LOAD DESCRIPTION
				1	3867	720					2	20 A	1	RCPT	BUS WASH CHARGER - 300
STEAM WASH (EQ8) - 300	MTR	3	50 A	3			3867	--			4	--	1	--	SPACE
				5					3867	--	6	--	1	--	SPACE
SPACE	--	1	--	7	--	--					8	--	1	--	SPACE
SPACE	--	1	--	9			--	--			10	--	1	--	SPACE
SPARE	--	1	20 A	11					0	0	12	20 A	1	--	SPARE
SPARE	--	1	20 A	13	0	0					14	20 A	1	--	SPARE
SPARE	--	1	20 A	15			0	0			16	20 A	1	--	SPARE
SPARE	--	1	20 A	17					0	0	18	20 A	1	--	SPARE

BREAKER MODIFIER LEGEND
(G) - GROUND FAULT CIRCUIT INTERRUPTER. (A) - ARC FAULT CIRCUIT INTERRUPTER. (L) - LOCK-OUT PROVISIONS. (S) - SHUNT-TRIP.
(F) - FIRE ALARM CIRCUIT - PROVIDE LOCK-ON DEVICE AND PERMANENT RED MARKING AND LABELING AS "FIRE ALARM CIRCUIT".

LOAD CLASSIFICATION	CONNECTED LOAD	DEMAND FACTOR	ESTIMATED DEMAND	PANEL TOTALS	
Motor	11600 VA	125.00%	14500 VA		
Receptacle	720 VA	100.00%	720 VA		
				CONNECTED LOAD:	12320 VA
				EST. DEMAND LOAD:	15220 VA
				CONNECTED CURRENT:	34 A
				EST. DEMAND CURRENT:	42 A

NOTES:

PANELBOARD: HL

LOCATION: ELECTRICAL 205
MOUNTING: SURFACE NEMA 1
FED FROM: MSB
FEEDER: SEE ONE-LINE DIAGRAM

PANEL TYPE:
VOLTAGE: 480Y/277V / 3 ø / 4W
BUS AMPS: 100 AMPS
MAIN DEVICE: 60 A MAIN CB
A.I.C. RATING: 14,000 AMPS SYMMETRICAL
SPECIAL:

LOAD DESCRIPTION	LOAD TYPE	P	TRIP	CKT	A		B		C		CKT	TRIP	P	LOAD TYPE	LOAD DESCRIPTION
LIGHTING	LTS	1	20 A	1	408	663					2	20 A	1	LTS	LIGHTING
LIGHTING	LTS	1	20 A	3			510	255			4	20 A	1	LTS	LIGHTING
SPACE	--	1	--	5					--	--	6	--	1	--	SPACE
SPACE	--	1	--	7	--	--					8	--	1	--	SPACE
SPACE	--	1	--	9			--	--			10	--	1	--	SPACE
SPARE	--	1	20 A	11					0	0	12	20 A	1	--	SPARE
SPARE	--	1	20 A	13	0	0					14	20 A	1	--	SPARE
SPARE	--	1	20 A	15			0	0			16	20 A	1	--	SPARE
SPARE	--	1	20 A	17					0	0	18	20 A	1	--	SPARE

BREAKER MODIFIER LEGEND
(G) - GROUND FAULT CIRCUIT INTERRUPTER. (A) - ARC FAULT CIRCUIT INTERRUPTER. (L) - LOCK-OUT PROVISIONS. (S) - SHUNT-TRIP.
(F) - FIRE ALARM CIRCUIT - PROVIDE LOCK-ON DEVICE AND PERMANENT RED MARKING AND LABELING AS "FIRE ALARM CIRCUIT".

LOAD CLASSIFICATION	CONNECTED LOAD	DEMAND FACTOR	ESTIMATED DEMAND	PANEL TOTALS	
Lighting	1836 VA	125.00%	2295 VA		
				CONNECTED LOAD:	1836 VA
				EST. DEMAND LOAD:	2295 VA
				CONNECTED CURRENT:	2 A
				EST. DEMAND CURRENT:	3 A

NOTES:

PANELBOARD: LRB

LOCATION: MECHANICAL 206
MOUNTING: SURFACE NEMA 1
FED FROM: T-LRB
FEEDER: SEE ONE-LINE DIAGRAM

PANEL TYPE:
VOLTAGE: 208Y/120V / 3 ø / 4W
BUS AMPS: 100 AMPS
MAIN DEVICE: 60 A MAIN CB
A.I.C. RATING: 10,000 AMPS SYMMETRICAL
SPECIAL:

LOAD DESCRIPTION	LOAD TYPE	P	TRIP	CKT	A		B		C		CKT	TRIP	P	LOAD TYPE	LOAD DESCRIPTION
RCPT - 300	RCPT	1	20 A	1	1080	1080					2	20 A	1	RCPT	RCPT - 300
RCPT - 300	RCPT	1	20 A	3			1080	1080			4	20 A	1	RCPT	RCPT - 300
RCPT - 300	RCPT	1	20 A	5					1080	720	6	20 A	1	RCPT	RCPT - ROOF
SPACE	--	1	--	7	--	--					8	--	1	--	SPACE
SPACE	--	1	--	9			--	--			10	--	1	--	SPACE
SPACE	--	1	--	11					--	--	12	--	1	--	SPACE
SPACE	--	1	--	13	--	--					14	--	1	--	SPACE
SPACE	--	1	--	15			--	--			16	--	1	--	SPACE
SPACE	--	1	--	17					--	--	18	--	1	--	SPACE
SPACE	--	1	--	19	--	--					20	--	1	--	SPACE
SPARE	--	1	20 A	21			0	0			22	20 A	1	--	SPARE
SPARE	--	1	20 A	23					0	0	24	20 A	1	--	SPARE
SPARE	--	1	20 A	25	0	0					26	20 A	1	--	SPARE
SPARE	--	1	20 A	27			0	0			28	20 A	1	--	SPARE
SPARE	--	1	20 A	29					0	0	30	20 A	1	--	SPARE

BREAKER MODIFIER LEGEND
(G) - GROUND FAULT CIRCUIT INTERRUPTER. (A) - ARC FAULT CIRCUIT INTERRUPTER. (L) - LOCK-OUT PROVISIONS. (S) - SHUNT-TRIP.
(F) - FIRE ALARM CIRCUIT - PROVIDE LOCK-ON DEVICE AND PERMANENT RED MARKING AND LABELING AS "FIRE ALARM CIRCUIT".

LOAD CLASSIFICATION	CONNECTED LOAD	DEMAND FACTOR	ESTIMATED DEMAND	PANEL TOTALS	
Receptacle	6120 VA	100.00%	6120 VA		
				CONNECTED LOAD:	6120 VA
				EST. DEMAND LOAD:	6120 VA
				CONNECTED CURRENT:	17 A
				EST. DEMAND CURRENT:	17 A

NOTES:

PANELBOARD: LRA2

LOCATION: MECHANICAL 206
MOUNTING: SURFACE NEMA 1
FED FROM: T-LRA2
FEEDER: SEE ONE-LINE DIAGRAM

PANEL TYPE:
VOLTAGE: 208Y/120V / 3 ø / 4W
BUS AMPS: 100 AMPS
MAIN DEVICE: 60 A MAIN CB
A.I.C. RATING: 10,000 AMPS SYMMETRICAL
SPECIAL:

LOAD DESCRIPTION	LOAD TYPE	P	TRIP	CKT	A		B		C		CKT	TRIP	P	LOAD TYPE	LOAD DESCRIPTION
RCPT - 107	RCPT	1	20 A	1	360	1080					2	20 A	1	RCPT	RECEPTACLE ROOM 102, 104
RECEPTACLE TRAINING 102	RCPT	1	20 A	3			360	360			4	20 A	1	RCPT	RECEPTACLE TRAINING 102
RECEPTACLE TRAINING 102	RCPT	1	20 A	5					360	360	6	20 A	1	RCPT	RECEPTACLE TRAINING 102
RECEPTACLE TRAINING 102	RCPT	1	20 A	7	360	360					8	20 A	1	RCPT	RECEPTACLE TRAINING 102
RECEPTACLE TRAINING 102	RCPT	1	20 A	9			360	360			10	20 A	1	RCPT	RECEPTACLE TRAINING 102
RECEPTACLE TRAINING 102	RCPT	1	20 A	11					360	360	12	20 A	1	RCPT	RECEPTACLE TRAINING 102
RECEPTACLE TRAINING 102	RCPT	1	20 A	13	360	360					14	20 A	1	RCPT	RECEPTACLE TRAINING 102
RECEPTACLE TRAINING 102	RCPT	1	20 A	15			960	394			16	20 A	1	OTHR; RCPT	RECEPTACLE TRAINING 102
RECEPTACLE TRAINING 102	RCPT	1	20 A	17					540	180	18	20 A	1	RCPT	GREEN WALL IRRIGATION
SPACE	--	1	--	19	--	--					20	--	1	--	SPACE
SPACE	--	1	--	21			--	--			22	--	1	--	SPACE
SPACE	--	1	--	23					--	--	24	--	1	--	SPACE
SPACE	--	1	--	25	--	--					26	--	1	--	SPACE
SPACE	--	1	--	27			--	--			28	--	1	--	SPACE
SPACE	--	1	--	29					--	--	30	--	1	--	SPACE
SPARE	--	1	20 A	31	0	0					32	20 A	1	--	SPARE
SPARE	--	1	20 A	33			0	0			34	20 A	1	--	SPARE
SPARE	--	1	20 A	35					0	0	36	20 A	1	--	SPARE
SPARE	--	1	20 A	37	0	0					38	20 A	1	--	SPARE
SPARE	--	1	20 A	39			0	0			40	20 A	1	--	SPARE
SPARE	--	1	20 A	41					0	0	42	20 A	1	--	SPARE

BREAKER MODIFIER LEGEND
(G) - GROUND FAULT CIRCUIT INTERRUPTER. (A) - ARC FAULT CIRCUIT INTERRUPTER. (L) - LOCK-OUT PROVISIONS. (S) - SHUNT-TRIP.
(F) - FIRE ALARM CIRCUIT - PROVIDE LOCK-ON DEVICE AND PERMANENT RED MARKING AND LABELING AS "FIRE ALARM CIRCUIT".

LOAD CLASSIFICATION	CONNECTED LOAD	DEMAND FACTOR	ESTIMATED DEMAND	PANEL TOTALS	
Other	34 VA	100.00%	34 VA		
Receptacle	7800 VA	100.00%	7800 VA		
				CONNECTED LOAD:	7834 VA
				EST. DEMAND LOAD:	7834 VA
				CONNECTED CURRENT:	22 A
				EST. DEMAND CURRENT:	22 A

NOTES:

PANELBOARD: LRA1

LOCATION: MECHANICAL 206
MOUNTING: SURFACE NEMA 1
FED FROM: T-LRA1
FEEDER: SEE ONE-LINE DIAGRAM

PANEL TYPE:
VOLTAGE: 208Y/120V / 3 ø / 4W
BUS AMPS: 225 AMPS
MAIN DEVICE: 110 A MAIN CB
A.I.C. RATING: 10,000 AMPS SYMMETRICAL
SPECIAL:

LOAD DESCRIPTION	LOAD TYPE	P	TRIP	CKT	A		B		C		CKT	TRIP	P	LOAD TYPE	LOAD DESCRIPTION
RCPT - 122, 123, 128	RCPT	1	20 A	1	1260	1260					2	20 A	1	RCPT	RCPT - 124, 125, 128
RCPT - 126, 127, 128	RCPT	1	20 A	3			1080	562			4	20 A	1	OTHR; RCPT	RCPT - 121
RCPT - 121, 120	RCPT	1	20 A	5					900	940	6	20 A	1	RCPT	RCPT - 130, 129
RCPT - 130, 142	RCPT	1	20 A	7	720	1080					8	20 A	1	RCPT	RCPT - 133, 134, 132, 129
RCPT - 136, 129, 132	RCPT	1	20 A	9			1080	540			10	20 A	1	RCPT	RCPT - 132, 135
RCPT - 133	OTHR; RCPT	1	20 A	11					404	360	12	20 A	1	RCPT	RCPT - 133
RCPT - 133	RCPT	1	20 A	13	360	1280					14	20 A	1	MTR; RCPT	RCPT - 117, 114, 112, 142
WATER COOLER - 118 (G)	RCPT	1	20 A	15			180	1260			16	20 A	1	RCPT	RCPT - 116, 115, 118
WATER COOLER - 101 (G)	RCPT	1	20 A	17					180	920	18	20 A	1	RCPT	RCPT - 101, 100
MOTORIZED SHADES	MTR	1	20 A	19	264	264					20	20 A	1	MTR	MOTORIZED SHADES
RCPT - 105, 106, 110, 101	RCPT	1	20 A	21			900	940			22	20 A	1	RCPT	RCPT - 110, 108
RCPT - 206, 205	RCPT	1	20 A	23					900	1160	24	20 A	1	RCPT	RCPT - 108, 199
RCPT - 107	RCPT	1	20 A	25	360	401					26	20 A	1	OTHR; RCPT	RCPT - 107
MICROWAVE - 107	RCPT	1	20 A	27			180	180			28	20 A	1	RCPT	MICROWAVE - 107
RCPT - 107	RCPT	1	20 A	29					540	180	30	20 A	1	RCPT	DISHWASHER - 107
SPARE	--	1	20 A	31	0	0					32	20 A	1	--	SPARE
SPARE	--	1	20 A	33			0	0			34	20 A	1	--	SPARE
SPARE	--	1	20 A	35					0	0	36	20 A	1	--	SPARE
SPARE	--	1	20 A	37	0	0					38	20 A	1	--	SPARE
SPARE	--	1	20 A	39			0	0			40	20 A	1	--	SPARE
SPARE	--	1	20 A	41					0	0	42	20 A	1	--	SPARE

BREAKER MODIFIER LEGEND
(G) - GROUND FAULT CIRCUIT INTERRUPTER. (A) - ARC FAULT CIRCUIT INTERRUPTER. (L) - LOCK-OUT PROVISIONS. (S) - SHUNT-TRIP.
(F) - FIRE ALARM CIRCUIT - PROVIDE LOCK-ON DEVICE AND PERMANENT RED MARKING AND LABELING AS "FIRE ALARM CIRCUIT".

LOAD CLASSIFICATION	CONNECTED LOAD	DEMAND FACTOR	ESTIMATED DEMAND	PANEL TOTALS	
Motor	548 VA	106.02%	581 VA		
Other	107 VA	100.00%	107 VA		
Receptacle	19980 VA	75.03%	14990 VA		
				CONNECTED LOAD:	20635 VA
				EST. DEMAND LOAD:	15678 VA
				CONNECTED CURRENT:	57 A
				EST. DEMAND CURRENT:	44 A

NOTES:

PROGRESSIVE AE, INC.
PROGRESSIVE COMPANIES
Charlotte, NC | Detroit, MI | Grand Rapids, MI
weareprogressive.com

HARBOR TRANSIT
NEW OPERATIONS CENTER
14603 172ND AVE, GRAND HAVEN, MI 49417

ISSUANCE
10/31/2025 BID AND PERMIT

PROJECT NUMBER
70890004
PROJECT MANAGER
S. HORTON
PROFESSIONAL
D.HERSCHER
DRAWN BY
K.MENK
CHECKED BY
D.HERSCHER

ELECTRICAL PANEL SCHEDULES
E604

10/31/2025 6:18:54 AM Autodesk Docs://70890004 - Harbor Transit/70890004-HT08-ELEC-rvt
BY: EBOHN
FILE: E604 - PANEL SCHEDULES
THIS DOCUMENT HAS BEEN PREPARED BY PROGRESSIVE AE, INC. AS AN INSTRUMENT OF SERVICE. ANY PROGRESSIVE AE, INC. SHALL LEAD ALL COMMON LAW, STATUTORY AND OTHER REPRODUCTIONS AND RIGHTS INCLUDING THE COPYRIGHT THERETO

PANELBOARD: LRM

LOCATION: ELECTRICAL 205
MOUNTING: SURFACE NEMA 1
FED FROM: T-LRM
FEEDER: SEE ONE-LINE DIAGRAM

PANEL TYPE:
VOLTAGE: 208Y/120V / 3 ø / 4W
BUS AMPS: 100 AMPS
MAIN DEVICE: 60 A MAIN CB
A.I.C. RATING: 10,000 AMPS SYMMETRICAL
SPECIAL:

LOAD DESCRIPTION	LOAD TYPE	P	TRIP	CKT	A		B		C		CKT	TRIP	P	LOAD TYPE	LOAD DESCRIPTION
RCPT - 200, 203, 201, 207, 210	MTR; RCPT	1	20 A	1	1280	720					2	20 A	1	RCPT	RCPT - 203
RCPT - 203	RCPT	1	20 A	3			720	720			4	20 A	1	RCPT	RCPT - 203
RCPT - 203	RCPT	1	20 A	5					720	1080	6	20 A	1	RCPT	RCPT - 204, 200, 203
RCPT - 200	RCPT	1	20 A	7	900	900					8	20 A	1	RCPT	RCPT - 200, 199
CORD REEL - 200	RCPT	1	20 A	9			200	200			10	20 A	1	RCPT	CORD REEL - 200
CORD REEL - 200	RCPT	1	20 A	11					200	200	12	20 A	1	RCPT	CORD REEL - 200
RCPT - 208, 209	RCPT	1	20 A	13	720	900					14	20 A	1	RCPT	RCPT - 208
IRRIGATION - 204	RCPT	1	20 A	15			180	--			16	--	1	--	SPACE
SPACE	--	1	--	17					--	--	18	--	1	--	SPACE
SPACE	--	1	--	19	--	--					20	--	1	--	SPACE
SPACE	--	1	--	21			--	--			22	--	1	--	SPACE
SPACE	--	1	--	23					--	--	24	--	1	--	SPACE
SPACE	--	1	--	25	--	--					26	--	1	--	SPACE
SPACE	--	1	--	27			--	--			28	--	1	--	SPACE
SPACE	--	1	--	29					--	--	30	--	1	--	SPACE
SPARE	--	1	20 A	31	0	0					32	20 A	1	--	SPARE
SPARE	--	1	20 A	33			0	0			34	20 A	1	--	SPARE
SPARE	--	1	20 A	35					0	0	36	20 A	1	--	SPARE
SPARE	--	1	20 A	37	0	0					38	20 A	1	--	SPARE
SPARE	--	1	20 A	39			0	0			40	20 A	1	--	SPARE
SPARE	--	1	20 A	41					0	0	42	20 A	1	--	SPARE

BREAKER MODIFIER LEGEND

(G) - GROUND FAULT CIRCUIT INTERRUPTER. (A) - ARC FAULT CIRCUIT INTERRUPTER. (L) - LOCK-OUT PROVISIONS. (S) - SHUNT-TRIP.
(F) - FIRE ALARM CIRCUIT - PROVIDE LOCK-ON DEVICE AND PERMANENT RED MARKING AND LABELING AS "FIRE ALARM CIRCUIT".

LOAD CLASSIFICATION	CONNECTED LOAD	DEMAND FACTOR	ESTIMATED DEMAND	PANEL TOTALS	
Motor	20 VA	125.00%	26 VA		
Receptacle	7330 VA	100.00%	7330 VA	**CONNECTED LOAD:**	7348 VA
				EST. DEMAND LOAD:	7353 VA
				CONNECTED CURRENT:	20 A
				EST. DEMAND CURRENT:	20 A

NOTES:

PROGRESSIVE AE, INC.
PROGRESSIVE COMPANIES
Charlotte, NC | Detroit, MI | Grand Rapids, MI
weareprogressive.com

HARBOR TRANSIT
NEW OPERATIONS CENTER

14623 172ND AVE, GRAND HAVEN, MI 49417

ISSUANCE
10/31/2025 BID AND PERMIT

PROJECT NUMBER
70890004
PROJECT MANAGER
S. HORTON
PROFESSIONAL
D.HERSCHER
DRAWN BY
K.MENK
CHECKED BY
D.HERSCHER

ELECTRICAL PANEL SCHEDULES
E605

10/31/2025 6:18:59 AM Autodesk Docs://70890004 - Harbor Transit/70890004-HT08-ELEC.rvt
9E - E605
ELECTRICAL PANEL SCHEDULES
THIS DOCUMENT HAS BEEN PREPARED BY PROGRESSIVE AE, INC. AS AN INSTRUMENT OF SERVICE, AND PROGRESSIVE AE, INC. SHALL RETAIN ALL COMMON LAW, STATUTORY AND OTHER RESERVED RIGHTS, INCLUDING THE COPYRIGHT THERETO.